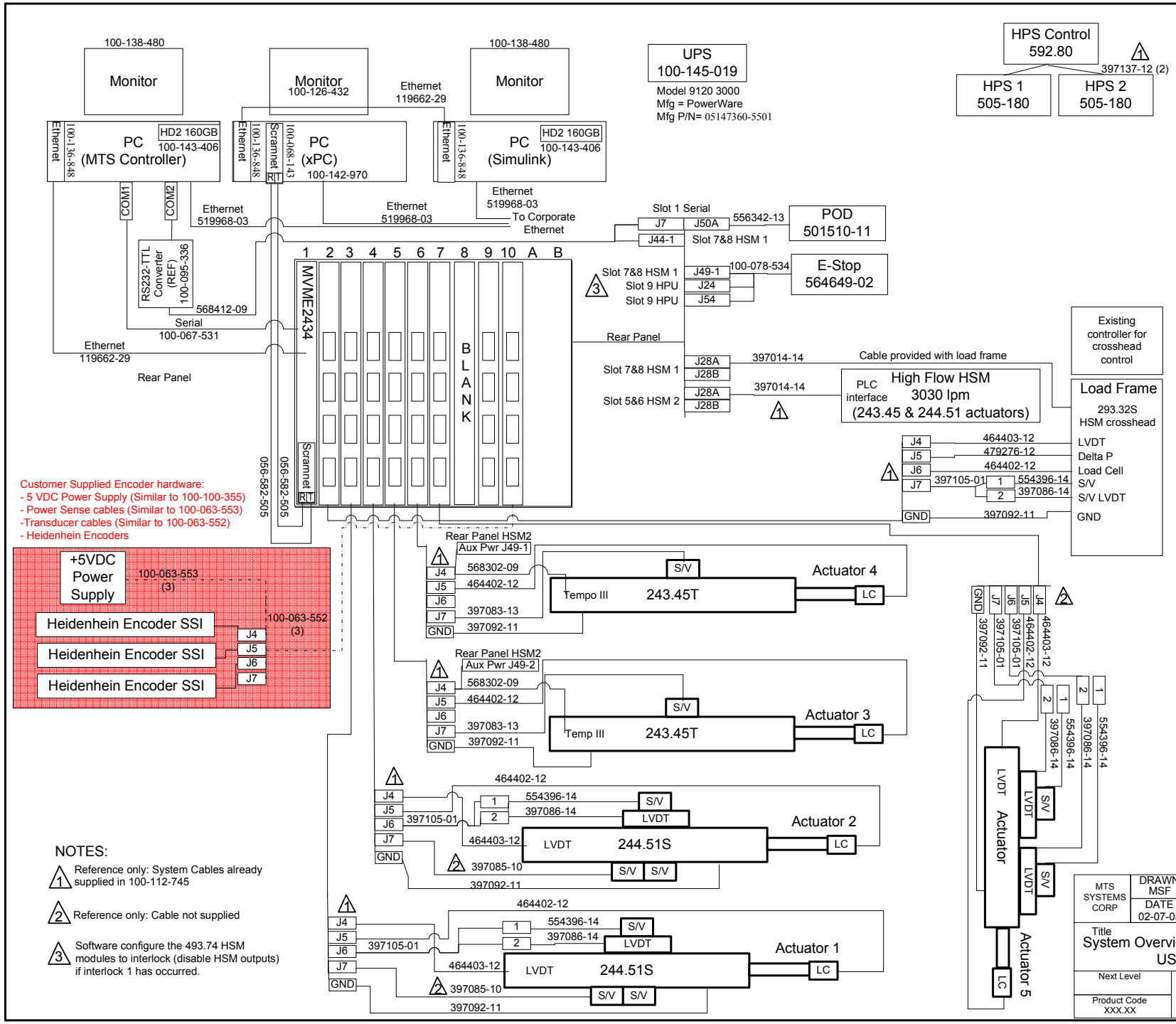

NOTES:

1. Reference only: System Cables already supplied in 100-112-745
2. Reference only: Cable not supplied
3. Software configure the 493.74 HSM modules to interlock (disable HSM outputs) if interlock 1 has occurred.

Revisions					
Description				Letter	ECN #
Drawn	ENGR	Date			

PROPRIETARY DATA
The information and design(s) disclosed herein are the property of MTS Systems Corporation and may not be used, reproduced, or disclosed in any form as granted in writing by MTS Systems Corporation.This restriction exceludes information that is in the public domain or was legitimately in the prior possession of the recipient.

MTS SYSTEMS CORP	DRAWN MSF	CHECK	ENGR MSF	MFG
	DATE 02-07-05	DATE	DATE 02-07-05	DATE

Title
System Overview: Ecole Poly, Structural 1
US1.22596.810-40

Next Level	SIZE	NUMBER	REV
Product Code XXX.XX	A	700-003-036	A
		SHEET 1 OF 1	

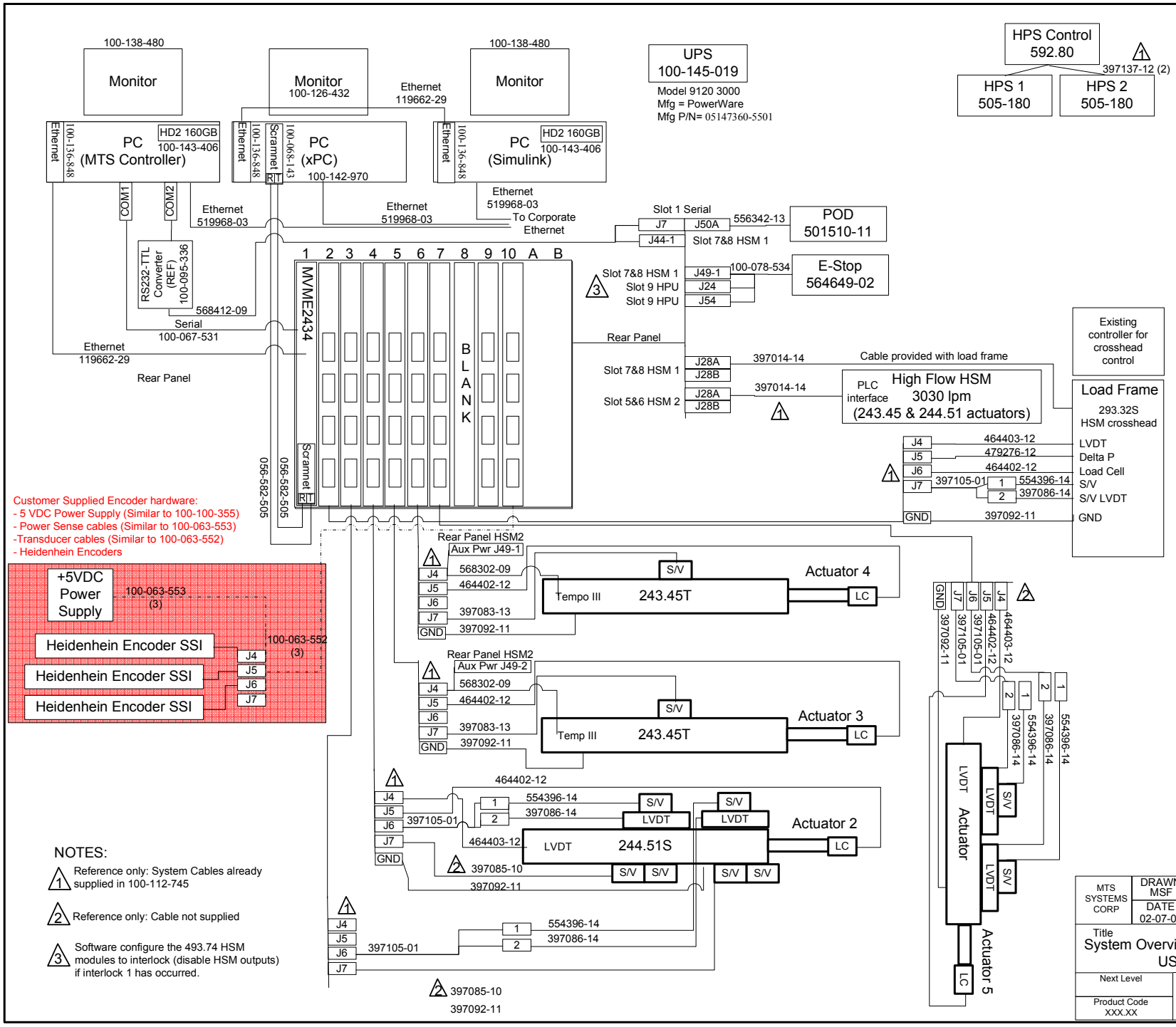

NOTES:

1. Reference only: System Cables already supplied in 100-112-745
2. Reference only: Cable not supplied
3. Software configure the 493.74 HSM modules to interlock (disable HSM outputs) if interlock 1 has occurred.

Revisions					
Description				Letter	ECN #
Drawn	ENGR	Date			

PROPRIETARY DATA
The information and design(s) disclosed herein are the property of MTS Systems Corporation and may not be used, reproduced, or disclosed in any form as granted in writing by MTS Systems Corporation.This restriction exceludes information that is in the public domain or was legitimately in the prior possession of the recipient.

MTS SYSTEMS CORP	DRAWN MSF	CHECK	ENGR MSF	MFG
	DATE 02-07-05	DATE	DATE 02-07-05	DATE

Title
System Overview: Ecole Poly, Structural 2
US1.22596.810-40

Next Level	SIZE	NUMBER	REV
Product Code XXX.XX	A	700-003-042	A
		SHEET 1 OF 1	

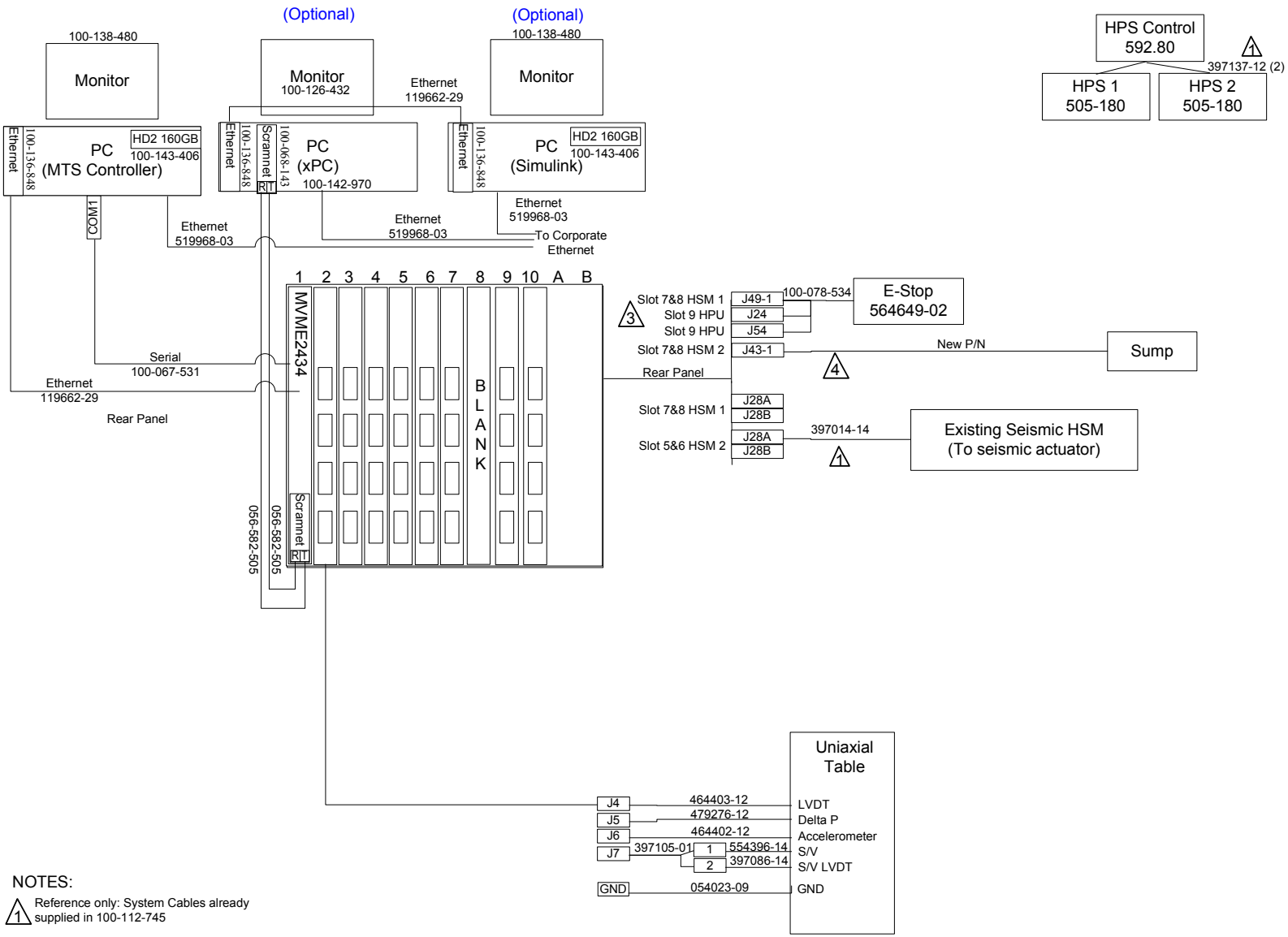

NOTES:

1. Reference only: System Cables already supplied in 100-112-745
2. Reference only: Cable not supplied
3. Software configure the 493.74 HSM modules to interlock (disable HSM outputs) if interlock 1 has occurred.
4. - Use HSM interlock (using HSM1 interface) to monitor Sump overflow via software. Inform user that sump is overflowing. When connected to slot 7&8 HSM1 board then the High flow HSM will not automatically turn off, since slot 5&6 HSM 2 board controls the High flow HSM.
   - If want tho hard interlock (HSM turns off if aump overflows then connect Sump interlock cable to slot 5&6 HSM2 J43A.

Revisions		
Description (Drawn ENGR Date)	Letter	ECN #

PROPRIETARY DATA
The information and design(s) disclosed herein are the property of MTS Systems Corporation and may not be used, reproduced, or disclosed in any form as granted in writing by MTS Systems Corporation.This restriction exceludes information that is in the public domain or was legitimately in the prior possession of the recipient.

MTS SYSTEMS CORP	DRAWN MSF	CHECK	ENGR MSF	MFG
	DATE 02-07-05	DATE	DATE 02-07-05	DATE

Title
System Overview: Ecole Poly, Siesmic
US1.22596.810-40

Next Level	SIZE	NUMBER	REV
Product Code XXX.XX	A	700-003-043	A
		SHEET 1 OF 1	

493.10 slot in Chassis:
100-031-198 = Chassis
100-031-142 = 493.10
100-031-143 = Power Supply
100-020-714 = Filter
100-027-375 = Label
038-852-101 = 115vac Outlet switch

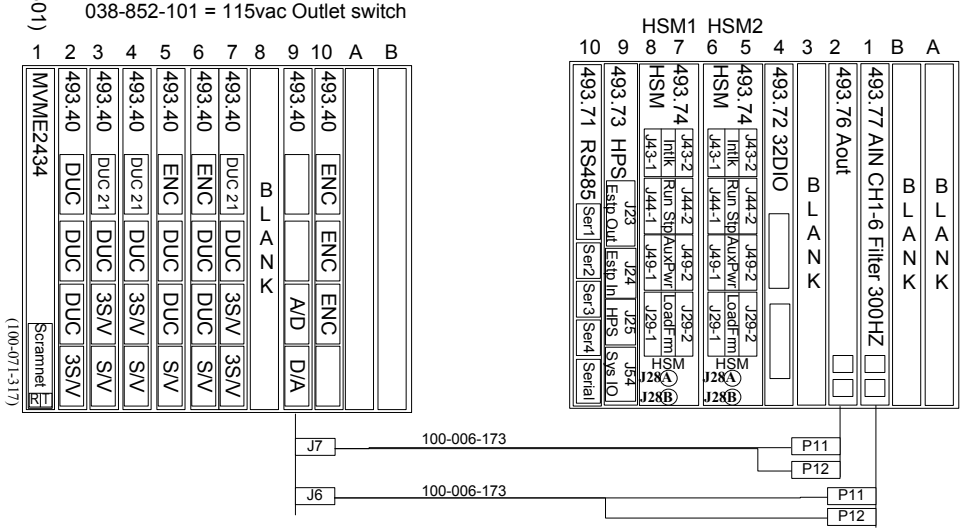

Front View

Rear View

Legend

RS485 board	493.71	(100-003-832)
DIO 32ch Card	493.72	(100-003-853)
HPU Transition Card	493.73	(100-003-855)
HSM Transition Card	493.74	(056-086-301)
Ain Transition Card	493.75	(100-008-984)
Aout Transition Card	493.76	(100-008-986)
Ain filter Transition Card	493.77	(056-013-705)
I/O carrier Card	493.40	(100-003-854)
DUC	493.25	(100-109-659)
A/D	493.45	(051-904-401)
D/A	493.46	(052-907-701)
ENC	493.47	(055-351-501)
S/V	493.14	(100-109-855)
3S/V	493.15	(100-109-974)
DUC 21	493.21B	(056-696-603) (2KHz EXC Freq)

Standard Jumper plugs

QTY	Part Number	Description
1	397132-01	P24 EStop IN (HPS)
1	397133-01	P25 Intlk/Defeat (HPS)
4	100-007-947	P29 E-Stop/XHD Lock (HSM)
4	100-007-948	P43 Interlock (HSM)

NOTES:

1

Revisions

Description	Letter	ECN #
Drawn ENGR Date		

PROPRIETARY DATA
The information and design(s) disclosed herein are the property of MTS Systems Corporation and may not be used, reproduced, or disclosed in any form as granted in writing by MTS Systems Corporation.This restriction exceludes information that is in the public domain or was legitimately in the prior possession of the recipient.

MTS SYSTEMS CORP	DRAWN MSF	CHECK	ENGR MSF	MFG
	DATE 02-07-05	DATE	DATE 02-07-05	DATE

Title
Controller US1.22596.810-40

Next Level	SIZE	NUMBER	REV
Product Code XXX.XX	A	100-145-271	A
		SHEET 1 OF 1	